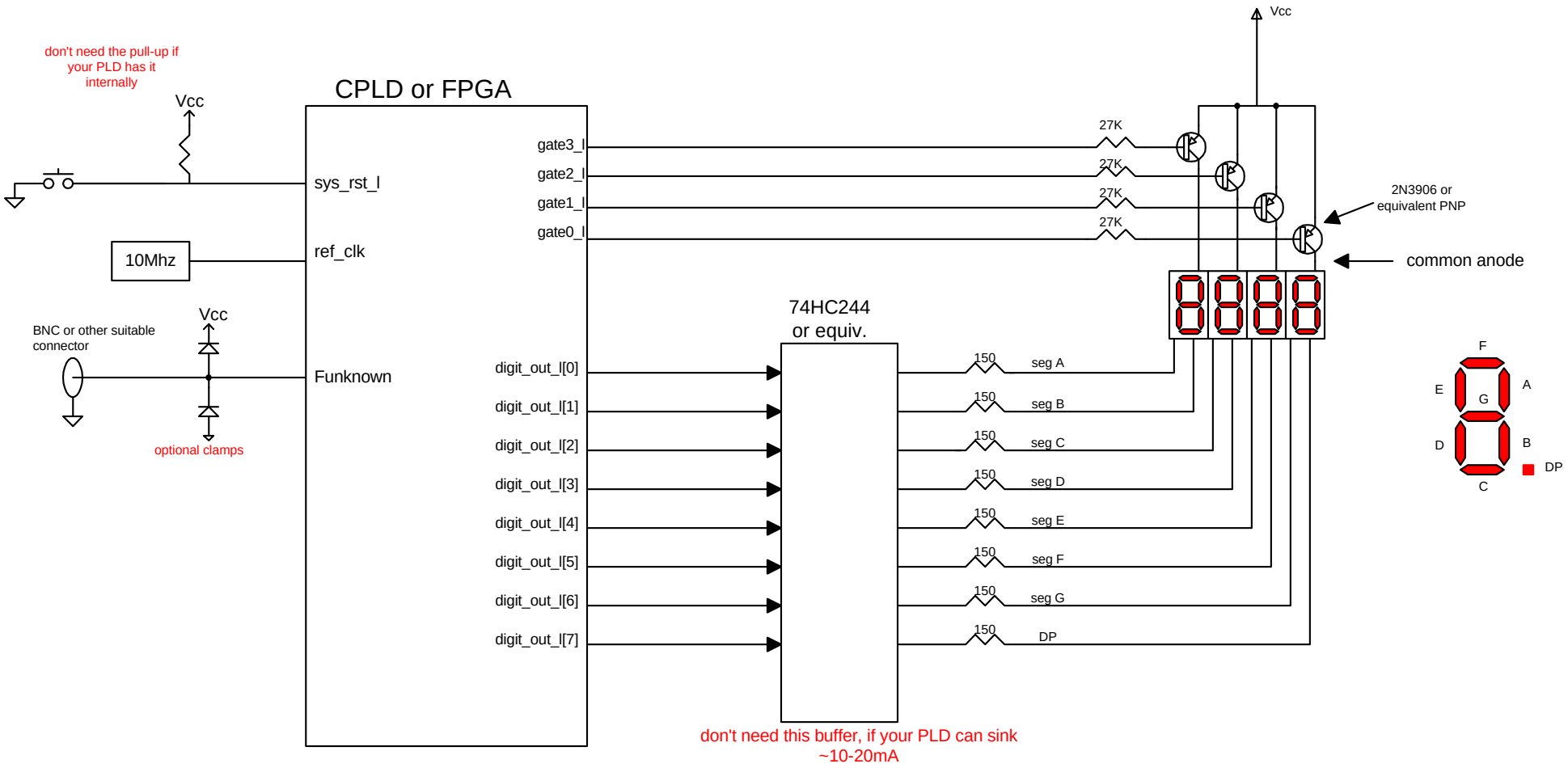

SUGGESTED SCHEMATIC FOR THE AUTO-RANGING FREQUENCY COUNTER